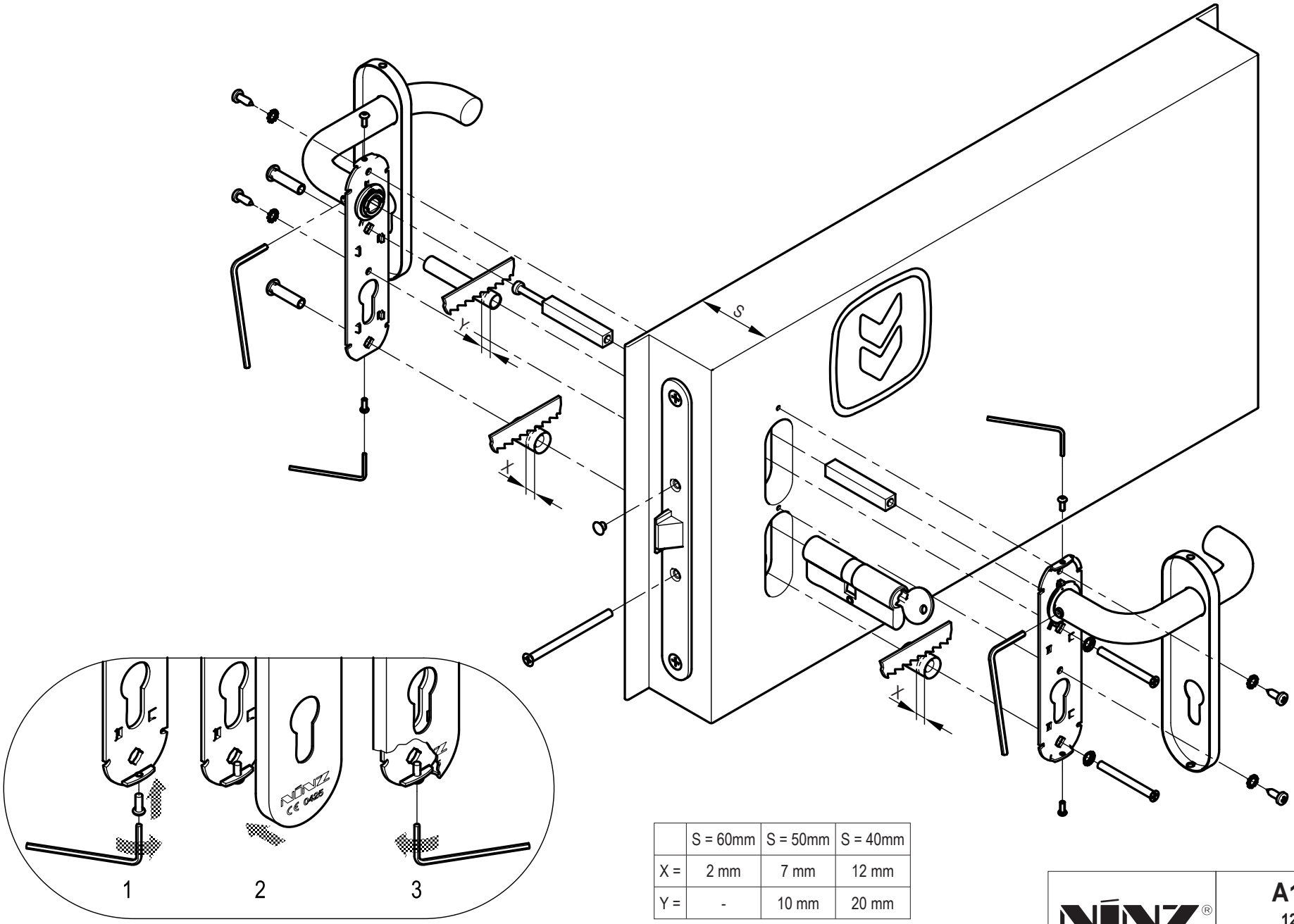

	S = 60mm	S = 50mm	S = 40mm
X =	2 mm	7 mm	12 mm
Y =	-	10 mm	20 mm

NINZ® FIREDOORS

A198
12/14
M3X